cut A-A

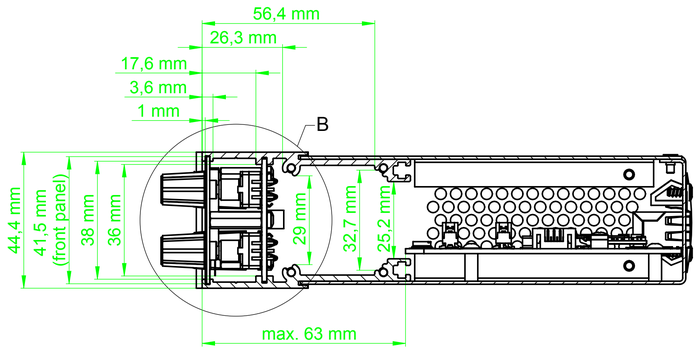

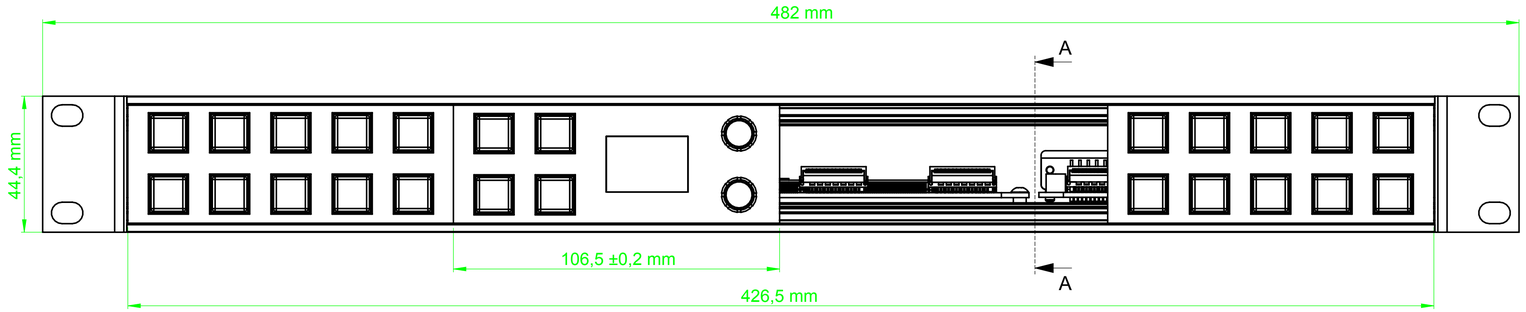

DETAIL B
MAßSTAB 2 : 1

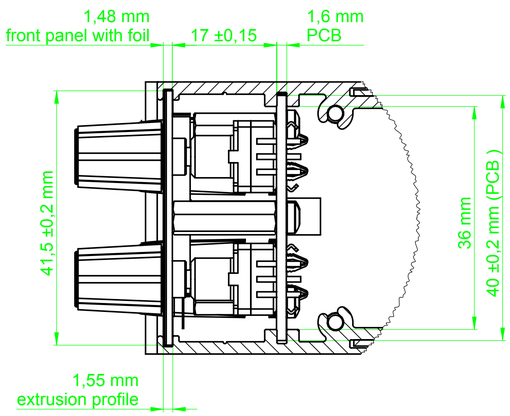

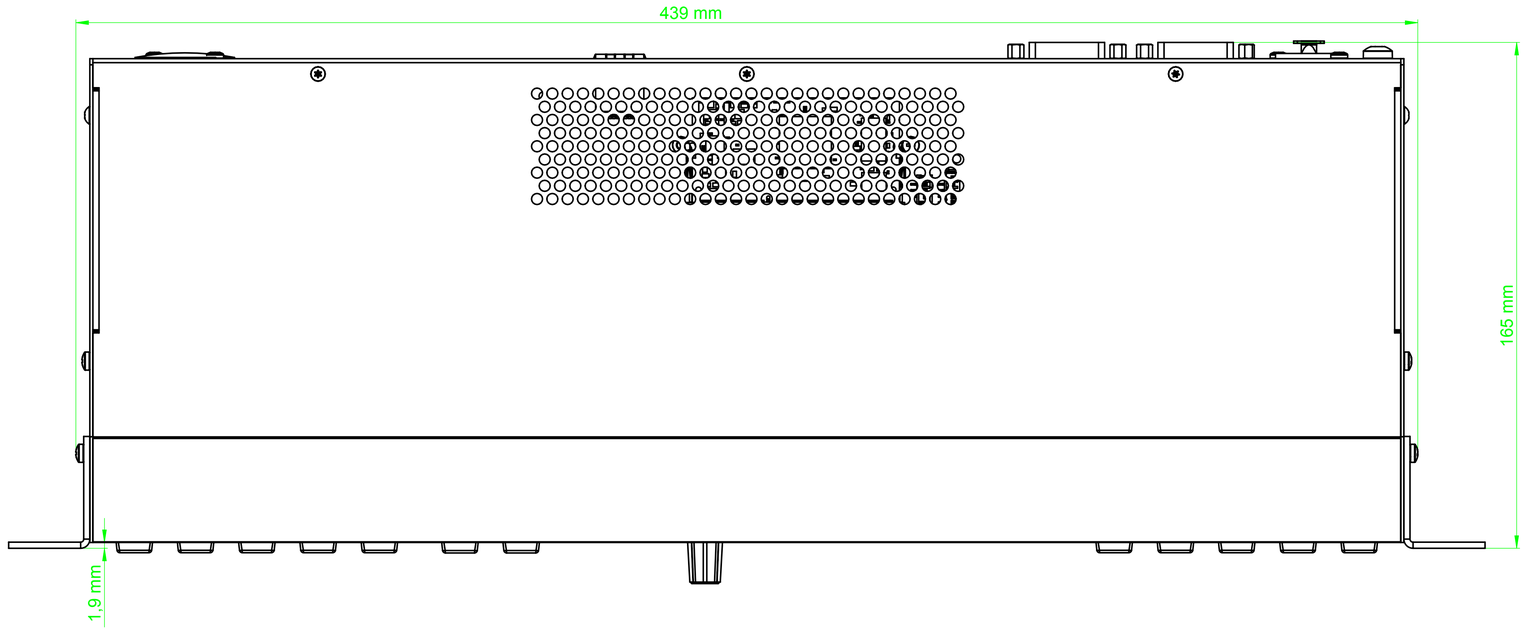

Maximum dimension:
Frontpanel with foil: 106.5 x 41.5 x 1.48 mm
circuit board: 105.0 x 40.0 x 1.6 mm

DHD.audio
DHD audio GmbH
Haferkornstraße 5
04129 Leipzig
Germany
Tel.: +49 (0)341 5897020
Fax: +49 (0)341 5897022
E-Mail: dhd@dhd-audio.de

Scale 1:1 (DIN A1)

Dimension 52-6500
Control Panel, 1U / 19"

Name: Miethling | Date: 27.06.2017

File: 52-6500_dimension.dwg

52-6500

Page: 1 / 1